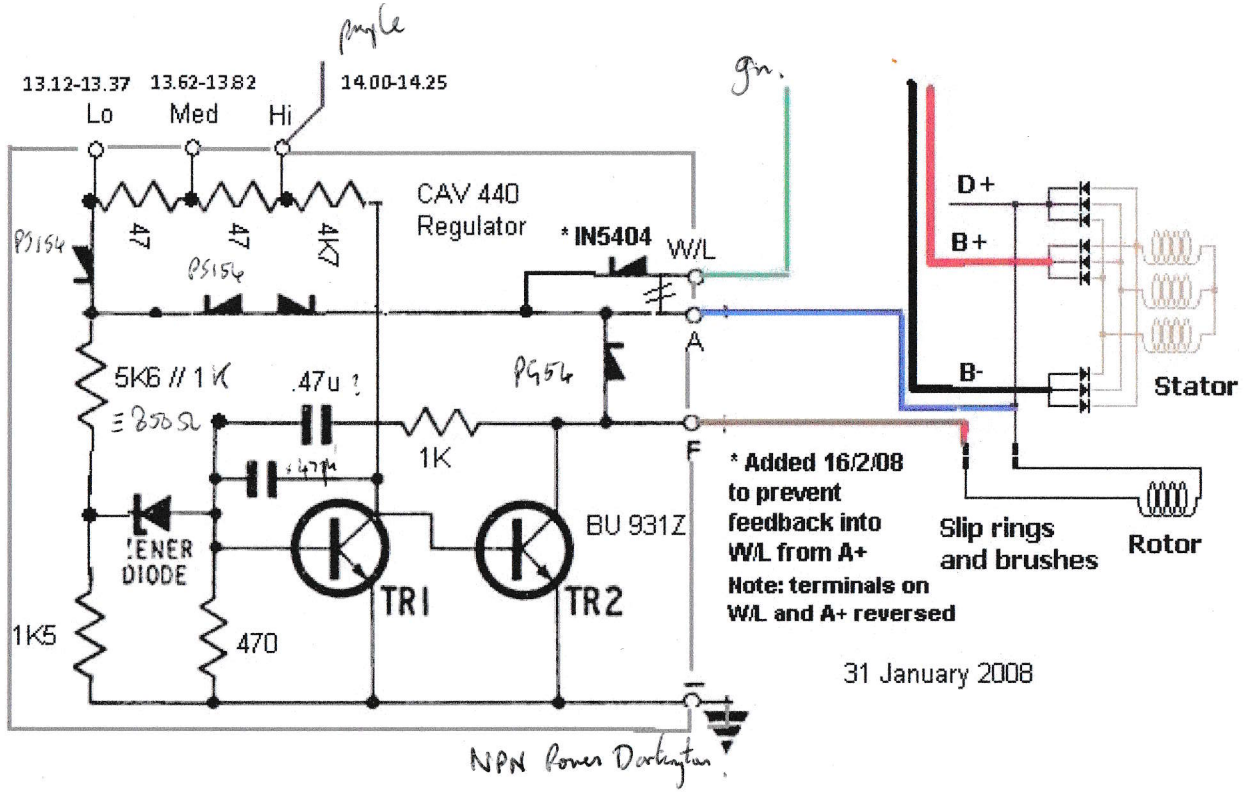Regulator 12V "CAV 1697D220".